TECHNICAL EXCELLENCE. SINCE 1929.

INDUSTRIAL CABLE REELS

SERIES 1700

ART. 1727 RNF

Length (m)
22

Number of conductors
4 G

Cross-section (mm^2)
4

Wound cable capacity (@20°C)
11 KW @ 400V

IP65 | EN 61242 EN 60335-1 EN 61316 | CE | 2014/35/UE 2006/42/CE 2011/65/UE

TECHNICAL DATA

Article	Cable length (m)	Reel cable length (m)	Cut length (m)	Number of conductors	Cross-section (mm^2)	Wound cable capacity (@20°C)	Unwound cable capacity (@20°C)	Cable diameter (mm)	Thermal switch	Type	Installation	Cable type
1727 RNF	22	20	2	4 G	4	11 KW @ 400V	15 KW @ 400V	15	NO	1	All installations	RUBBER (H07RN-F)

Optional

1701	1702	1703	1704	1706	1707	1708
0	0	0	0	I	N	N

Please note: The images are for illustrative and explanatory purposes only

OVERALL DIMENSIONS

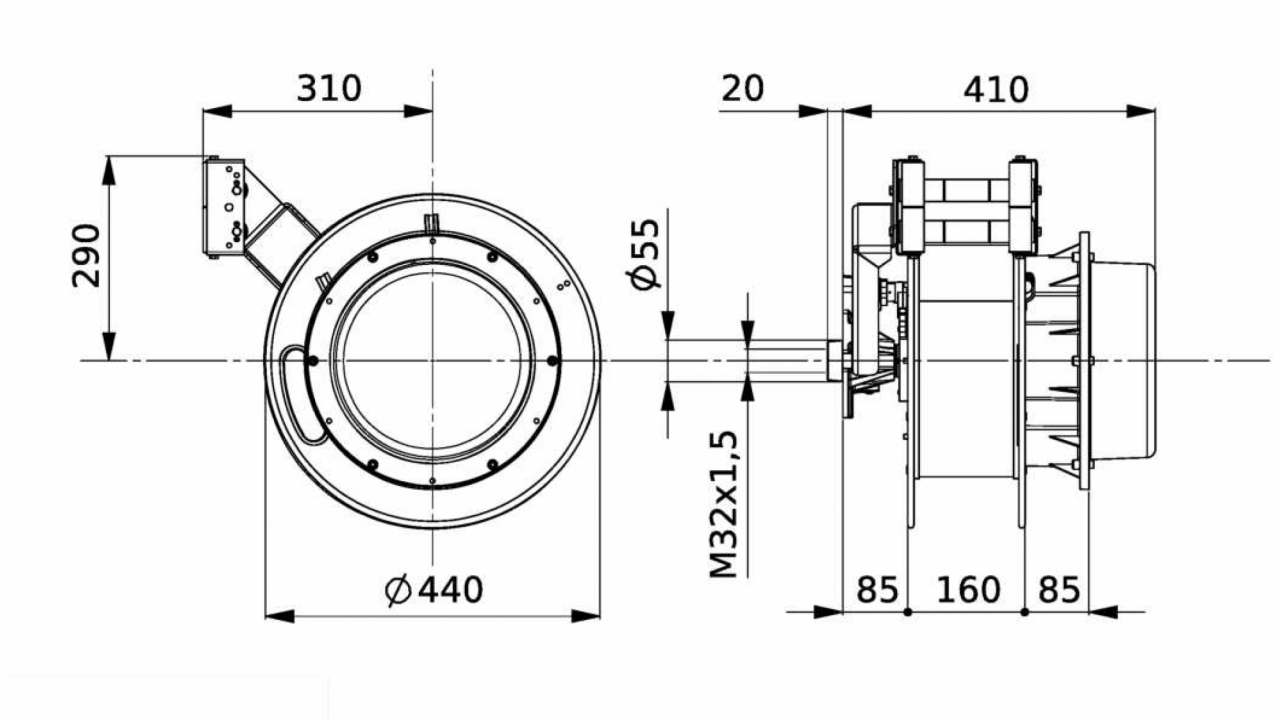

Technical features

- Structure in aluminum and steel with epoxy painting
- Side fixing flange in aluminum.
- Roller cable guide mouth and stop tooth supplied only for the TYPE 1 models indicated in the table (the stop tooth is normally supplied disconnected, and can be easily inserted by the user before installation).
- Collectors with a capacity of 32 - 60 - 100 A
- Steel springs suitable for ensuring optimal pull on the cable and a long life.
- Degree of protection IP 65.
- Supplied complete with cable H05VV-F, H07RN-F or without cable.
- Suitable for rewinding cables from 1 to 24 conductors, with a maximum length of 53 m.
- The winders supplied by us complete with cable are equipped with a cable clamp suitable for the cable installed.
- Supplied with 2,5 m input section.

TYPE 1 CONFIGURATION

Please note: The images are for illustrative and explanatory purposes only

OPTIONAL ACCESSORIES AND SPARE PARTS

ART. 1701

Swivel bracket

This section illustrates the complete range of the cable reels of our production.

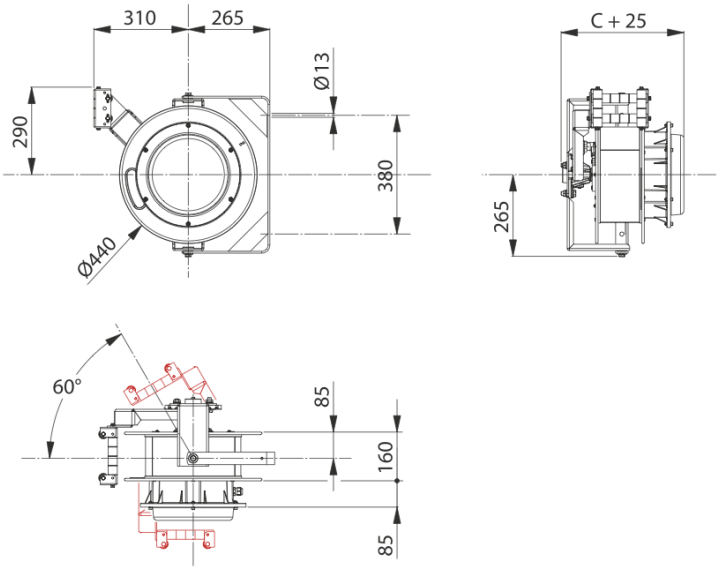

Please note: The images are for illustrative and explanatory purposes only

OPTIONAL ACCESSORIES AND SPARE PARTS

ART. 1703

Fixed bracket

For wall, floor or ceiling installation. This optional is supplied not fitted.
The cable reel can be fixed with optional bracket Art. 1703

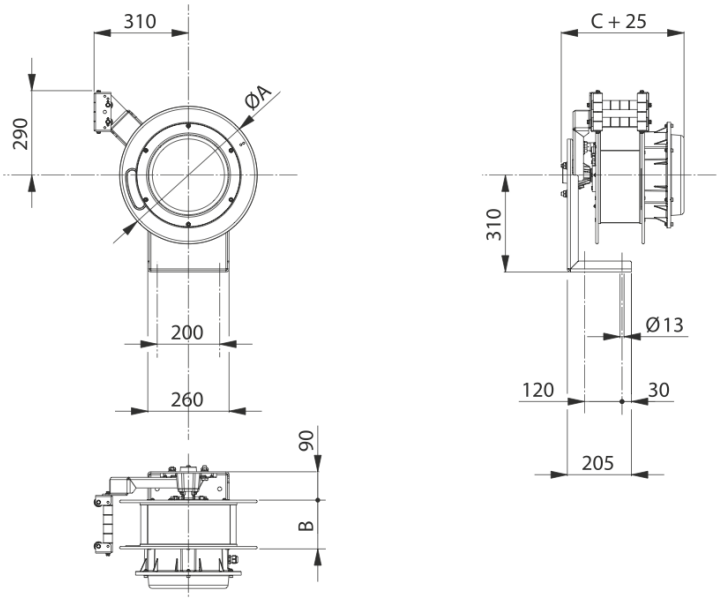

Please note: The images are for illustrative and explanatory purposes only

OPTIONAL ACCESSORIES AND SPARE PARTS

ART. 1702

Safety Return safety device

Safety device that slows down the uncontrolled winding of the cable, if the user inadvertently does not accompany it. This device is therefore activated, allowing the operator to work safely. Its application is recommended for manual use. This accessory can be installed only while assembling the cable reel and therefore it cannot be purchased separately.

Please note: The images are for illustrative and explanatory purposes only

OPTIONAL ACCESSORIES AND SPARE PARTS

ART. 1704 - 1708

Oscillating arm

Swinging arm, for installations with centreline feeding. The swinging arm art. 1704 cannot be installed with other optional accessories.
These cable reels can, on request, be supplied complete with pliers:
ATTENTION: it is NOT possible to install the stop tooth on the cable reels equipped with oscillating arm code 1704-1708.

OPTIONAL ACCESSORIES AND SPARE PARTS

ART. 1706 - 1707

Arm with cable guide entry and detent

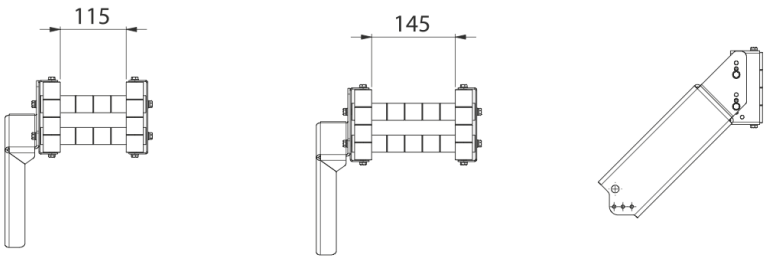

Please note: The images are for illustrative and explanatory purposes only